Monitor Selection

The selection of a water-quality monitor involves four major interrelated elements—(1) the purpose of the data collection, (2) the type of installation, (3) the type of sensor deployed at the installation, and (4) the specific sensors needed to satisfy the accuracy and precision requirements of the data-quality objectives.

Sensors are available as individual instruments or as a single combined instrument that has several different sensors in various combinations. For clarity in this report, a sensor is the fixed or detachable part of the instrument that measures a particular field parameter. A group of sensors configured together commonly is referred to as a sonde. A sonde typically has a single recording unit or electronic data logger to record the output of multiple sensors. The term monitor refers to the combination of sensor(s) and the recording unit or data logger. The most widely used water-quality sensors in monitoring installations are temperature, conductivity, DO, pH, and turbidity. These sensors are the focus of this report.

Monitor Configurations and Sensors

In general, three types of configurations are used for water-quality monitors. Each configuration has advantages and disadvantages in relation to site location and data-quality objectives. The flow-through monitoring system has a pump that delivers water from the measuring point to the sensor(s) or sonde housed in a shelter (fig. 2). Typical pumps for a flow-through monitoring system require 110-volt alternating current (AC) and pump about 10 gallons of water per minute. Access to power is a requirement for flow-through monitoring systems, but advantages and disadvantages of all of the monitoring configurations must be evaluated based on the monitoring objectives (table 3).

The second configuration is one in which only the sensors are placed directly at the measuring point (in situ) in the aquatic environment, and communication cables are run to the data logger and power system located in a water-resistant shelter (fig. 1). The primary advantages of the in-situ configuration are that no power is needed to pump water, small shelters can be used, and systems can be installed at remote locations where AC power is not available (table 3). Direct current (DC), 12-volt batteries easily meet the power requirements of the sensors and recording equipment, and solar panels may suffice in some areas.

The third type of water-quality monitoring system is an internal-logging, combined sensor and recording sonde that is entirely immersed and requires no external power, thus reducing its exposure to vandalism (fig. 3). Power is supplied by conventional batteries located in a sealed compartment, and sensor data are stored within the sonde on nonvolatile, flash-memory, recording devices. The primary advantages of the internal-logging configuration are that AC power or large batteries and shelters are not needed.

Types of Sensors

Sensors are available for continuous measurement of many field parameters and chemical constituents, but five of the most commonly used sensors are temperature, specific conductance, DO, pH, and turbidity. General concepts and calibration procedures are described in this report, but manufacturers' instructions and recommendations should be read carefully and followed. Although the concepts of monitor operation and record computation also apply to other types of sensors, insufficient information is available to specify calibration criteria, data-correction criteria, and maximum allowable limits for sensors measuring other field parameters (see *Application of Data Corrections*). If a sensor is used for which these criteria have not been specified, sufficient quality-assurance data must be collected to define and apply quality-control limits. This information should be documented in a quality-assurance plan.

Table 3. Principal advantages and disadvantages of continuous water-quality monitoring systems.

[AC, alternating current]

Advantages	Disadvantages
Flow-through monitoring system	
Unit can be coupled with chlorinators to reduce membrane fouling.	110-volt AC power source is needed.
Expensive sensor systems can be secured in vandal-proof shelters.	Large shelters are required, incurring higher installation costs.
Calibration can be performed in the shelter.	Pumps in streams can clog from algal fouling or high sediment loads.
Sample water from more than one measuring point can be pumped to a single set of sensors.	In shallow bank or poorly mixed installations, properly locating intakes or sensors in the cross section is difficult.
With satellite telemetry, data can be transmitted to an office location.	Electrical shock protection is required.
System can be monitored remotely for problems and needed service.	Pumps may be damaged by sediment or corrosive waters.
Freeze protection can be provided to the sensors.	Pump maintenance may be necessary.
	Pumping may cause changes in water quality.
In-situ monitoring system	
Remote locations are possible.	Sensors are susceptible to vandalism.
Small shelters can be used.	Sensors are more prone to fouling than in a flow-through system.
No power is needed to pump water, and electrical hazards are reduced.	Servicing sensors during flooding can be difficult.
With satellite telemetry, data can be transmitted to an office location.	In shallow bank or poorly mixed installations, properly locating intakes or sensors in the cross section is difficult.
System can be monitored remotely for problems and needed service.	Sensors are susceptible to debris or high flow.
Pump maintenance is not necessary.	Shifting channels may require adjustments to sensor placement.
	Susceptible to freezing.
Internal-logging monitoring system	
Location options are flexible.	Sensors are susceptible to vandalism.
No electrical hazards.	Sensors are more prone to fouling than in a flow-through system.
Exposure to vandalism may be reduced.	Servicing sensors during flooding can be difficult.
Pump maintenance is not necessary.	In shallow bank or poorly mixed installations, properly locating intakes or sensors in the cross section is difficult.
	Data are available only during site visits.
	Sensors are susceptible to debris or high flow.
	Shifting channels may require adjustments to sensor placement.
	Status of the equipment can only be checked while servicing.
	Data cannot be viewed without a site visit, and loss of data is unknown until a site visit.
	Susceptible to freezing.

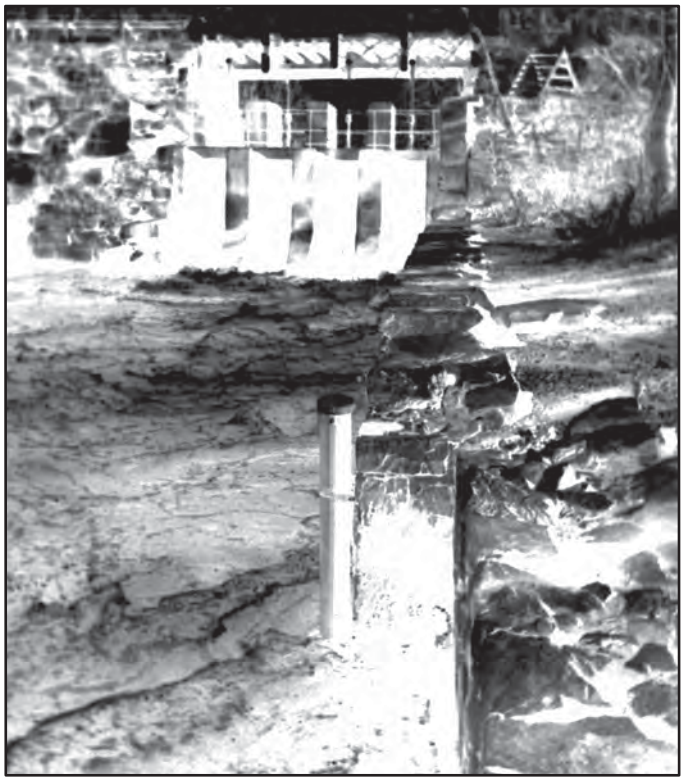

Bonnie Gray, U.S. Geological Survey

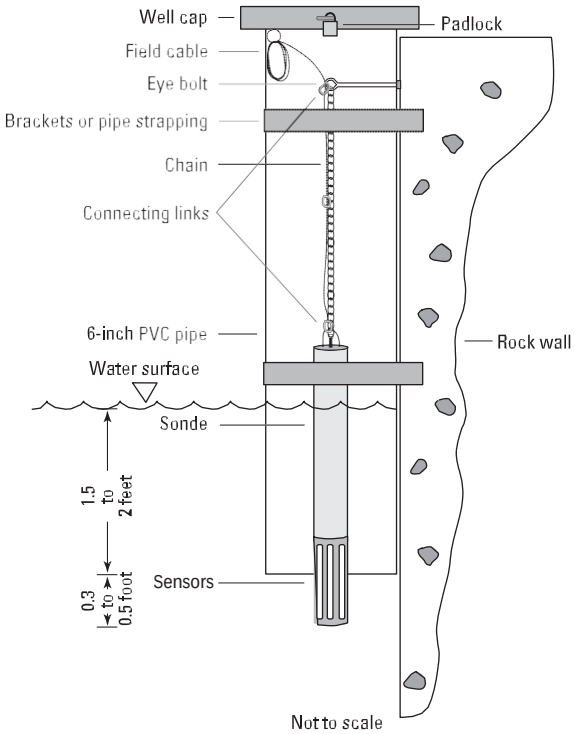

Figure 3. Delaware River and Araitan Canal feeder at Raven Rock, New Jersey, and schematic of internal-logging water-quality monitoring sensor and recording system.

Temperature

Temperature affects the density of water, the solubility of constituents (such as oxygen in water), pH, specific conductance, the rate of chemical reactions, and biological activity in water (Radtke and others, 2004). Continuous water-quality sensors usually measure temperature with a thermistor, which is a semiconductor having resistance that changes with temperature. Thermistors are reliable, accurate, and durable temperature sensors that require little maintenance and are relatively inexpensive. The preferred water-temperature scale for most scientific work is the Celsius scale. Modern thermistors can measure temperature to plus or minus (±) 0.1 degree Celsius (°C), but the user must verify the accuracy claimed by the manufacturer for the range of application.

Specific Conductance

Electrical conductivity is a measure of the capacity of water to conduct an electrical current and is a function of the types and quantities of dissolved substances in water (Radtke and others, 2005). As concentrations of dissolved ions increase, conductivity of the water increases. Specific conductance is the conductivity expressed in units of microsiemens per centimeter. The USGS measures and reports specific conductance in microsiemens per centimeter at 25 °C (µS/cm at 25 °C). Specific conductance measurements are a good surrogate for total dissolved solids and total ion concentrations, but there is no universal linear relation between total dissolved solids and specific conductance. Rather, the relation between specific conductance and constituent concentration must be determined for each site. A continuous record of specific conductance can be used in conjunction with chemical analyses and continuous discharge records to estimate constituent loads (Clifton and Gilliom, 1989; Hill and Gilliom, 1993; Christensen and others, 2000).

Specific conductance sensors generally are of two types—contact sensors with electrodes and sensors without electrodes. Continuous specific conductance sensors generally have electrodes that require the user to choose a cell constant for the expected range of specific conductance. Multiparameter monitoring systems should contain automatic temperature compensation circuits to compensate specific conductance to 25 °C. This should be verified by checking the manufacturer's instruction manual. All modern sensors are designed to measure specific conductance in the range of 0–2,000 µS/cm or higher. In general, specific conductance sensors are reliable, accurate, and durable but are susceptible to fouling from aquatic organisms and sediment.

Salinity

Although salinity is not measured directly, some sondes include the capability of calculating and recording salinity based on conductivity measurements. Conductivity has long been a tool for estimating the amount of chloride, a principal component of salinity, in water (Albert, 1964). Salinity is most commonly reported using the Practical Salinity Scale 1978 (Lewis, 1980), a scale developed relative to a standard potassium-chloride solution and based on conductivity, temperature, and barometric pressure measurements (American Public Health Association, 1998). Before development of the Practical Salinity Scale (PSS), salinity was reported in parts per thousand. Salinity expressed in the PSS is a dimensionless value, although by convention, it is reported as practical salinity units. Salinity in practical salinity units is nearly equivalent to salinity in parts per thousand. Because salinity is not directly measured but is derived from conductivity, the USGS recommends that salinity data stored in the National Water Information System (NWIS) be calculated from processed specific conductance records (see *Computation of Salinity*). If specific conductance values have been compensated to 25 °C and water depths are sufficiently shallow that pressure corrections are not necessary, salinity can be calculated using the equations described by Schemel (2001).

Dissolved Oxygen

Sources of DO in surface waters are primarily atmospheric reaeration and photosynthetic activity of aquatic plants (Lewis, 2005). DO is an important factor in chemical reactions in water and in the survival of aquatic organisms. In surface waters, DO concentrations typically range from 2 to 10 milligrams per liter (mg/L). DO saturation decreases as water temperature increases, and DO saturation increases with increased atmospheric pressure. Occasions of super saturation (greater than 100-percent DO saturation) often are related to excess photosynthetic production of oxygen by aquatic plants as a result of nutrient (nitrogen and phosphorus) enrichment, sunlight, and warm water temperatures, which often occur in lentic environments or in streams during low-flow conditions. Occasions of saturated oxygen commonly are related to cascading flow conditions, both natural and artificial. DO may be depleted by inorganic oxidation reactions or by biological and chemical processes that consume dissolved, suspended, or precipitated organic matter (Hem, 1989).

The DO solubility in saline environments is dependent on salinity as well as temperature and barometric pressure. DO in waters that have specific conductance values greater than 2,000 µS/cm should be corrected for salinity. Most modern sensors automatically compensate for the effects of salinity or have manual compensation techniques, but this should be verified by checking the manufacturer's instruction manual.

Several new technologies are available for measuring DO concentrations, but the technology most commonly used for continuous water-quality sensors is the amperometric method, which measures DO with a temperature-compensated polarographic membrane-type sensor. Although polarographic membrane-type sensors generally provide accurate results, they are sensitive to temperature and water velocity and are prone to fouling from algal growth and sedimentation. The measuring process consumes DO; therefore, water flow past the sensor is critical. If the water velocity at the point of measurement is less than 1 foot per second (ft/s), an automatic or manual stirring mechanism is required. Alternatively, a different technology may be used. DO sensors also can be affected by high water velocity. A complete discussion of DO calibration, measurement, and limitations can be found in Lewis (2005).

Because the permeability of the membrane and solubility of oxygen in water change as functions of temperature, it is critical that the DO sensors be temperature compensated. The Teflon® membranes of DO sensors are susceptible to fouling; the membrane and retaining ring are susceptible to loss of elasticity; and the cathode-anode measuring electrodes are susceptible to chemical alteration. Fouling of the membrane includes coating from oily or other organic substances, siltation, attachment of aquatic organisms (for example, barnacles in estuarine locations), growth of algae, or deposition of other materials. Chemical alteration of the DO electrodes can be caused by a strong oxidizing or reducing chemical agent, such as a chemical spill, by metal-rich drainage water, or by organic-rich waters, such as a wetland. A more common chemical alteration is sulfide poisoning of the anode in oceanographic or ground-water environments. Poisoning is corroborated by chronically low DO readings even after sensor membrane replacement. Sulfide poisoning is evident as a gray or black color on the silver anode. Refurbishing a poisoned anode or replacement of a damaged sensor membrane is simple but requires calibration and may eliminate the ability to distinguish calibration drift from fouling. Manufacturer's instructions must be followed in refurbishing or repairing a fouled electrode.

The newest technology for measuring DO is the luminescent sensor that is based on dynamic fluorescence quenching. This method employs measurement of light-emission characteristics of a luminescent-based reaction at the sensor-water interface (Lewis, 2005). The sensor has a light-emitting diode (LED) to illuminate a specially designed oxygen-sensitive substrate that, when excited, emits a luminescent light with a lifetime that is directly proportional to the ambient oxygen concentration. The response time of this sensor technology is fast; there are few known interferences to an unfouled sensor; there is no dependence on flow; and the sensors are claimed to have long-term stability (Alliance for Coastal Technologies, 2004).

Percentage of Dissolved Oxygen Saturation

A common method for expressing the oxygenation of a water body is the percentage of DO saturation relative to 100 percent. DO solubility is based on ambient water temperature, atmospheric pressure, and salinity. Some DO

sensors include the capability of recording the percentage of DO saturation based on measurement or stored information on water temperature, atmospheric pressure, and salinity. DO saturation is calculated by using the equations described by Weiss (1970) and the program described in USGS Technical Memorandum 99.01 (U.S. Geological Survey, 1998) and available online at *http://water.usgs.gov/software/dotables.html*. The USGS recommends that DO percentage of saturation be calculated from fully processed and corrected continuous records of DO, temperature, and specific conductance.

pH

The pH of an aqueous solution is controlled by interrelated chemical reactions that produce or consume hydrogen ions (Hem, 1989). The pH of a solution is a measure of the effective hydrogen-ion concentration (Radtke and others, 2003). More specifically, pH is a measure that represents the negative base-10 logarithm of hydrogen-ion activity of a solution, in moles per liter. Solutions having a pH below 7 are described as acidic, and solutions with a pH greater than 7 are described as basic or alkaline. Dissolved gases, such as carbon dioxide, hydrogen sulfide, and ammonia, appreciably affect pH. Degasification (for example, loss of carbon dioxide) or precipitation of a solid phase (for example, calcium carbonate) and other chemical, physical, and biological reactions may cause the pH of a water sample to change appreciably soon after sample collection (Radtke and others, 2003).

The electrometric pH-measurement method, using a hydrogen-ion electrode, commonly is used in continuous water-quality pH sensors. Sensors used in submersible monitors typically are combination electrodes in which a proton (H^+)-selective glass-bulb reservoir is filled with an approximate pH-7 buffer. A silver wire coated with silver chloride is immersed in the internal reference electrode buffer reservoir. Protons on both sides of the glass pH electrode (media and buffer reservoir) selectively interact with the glass, setting up an external potential gradient across the outer glass membrane. Because the hydrogen-ion concentration in the internal buffer solution is constant, this external potential difference across the outer glass membrane, which is determined relative to the internal silver/silver-chloride reference electrode, is proportional to the pH of the medium. A correctly calibrated pH sensor can accurately measure pH to $\pm$0.2 pH unit; however, the sensor can be scratched, broken, or fouled easily. If streamflow rates are high, the accuracy of the pH measurement can be affected by streaming-potential effects (Radtke and others, 2003). The pH sensors are particularly prone to sensitivity loss (Busenberg and Plummer, 1987), which may result from a partially clogged reference electrode junction or a change in the concentration of the filling solution. The treatment for suspected sensitivity loss from sensor drift is sensor reconditioning or replacement. It is possible to distinguish between pH sensor drift and electronic drift by determining the sensor slope; however, because the correction for each is the same, it is not necessary. Detailed instructions for the calibration and measurement of pH are described by Radtke and others (2003) and by the instrument manufacturer.

Turbidity

Turbidity is defined as an expression of the optical properties of a sample that cause light rays to be scattered and absorbed, rather than transmitted in straight lines through a sample (ASTM International, 2003). ASTM further describes turbidity as the presence of suspended and dissolved matter, such as clay, silt, finely divided organic matter, plankton, other microscopic organisms, organic acids, and dyes. Implicit in this definition is the fact that color, either of dissolved materials or of particles suspended in the water, also can affect turbidity.

Turbidity sensors operate differently from those for temperature, specific conductance, DO, and pH, which convert electrical potentials into the measurement of the constituent of interest. Submersible turbidity sensors typically direct a light beam from a light-emitting diode into the water sample and measure the light that scatters or is absorbed by the suspended particles in the water. The sensor response is related to the wavelength of the incident light and the size, shape, and composition of the particulate matter in the water. The effect of temperature on turbidity sensors is minimal, and the software for modern sensors provides temperature compensation. Calibration and measurement of turbidity by using a submersible sensor are discussed by Anderson (2004). Sensors that are maintained and calibrated routinely should be relatively error free.

Numerous methods and instruments can be used to measure turbidity. Because different measurement technologies result in different sensor responses to the same turbidity calibrant, a set of turbidity parameter codes, method codes, and reporting units has been developed to differentiate between various instruments and methodologies (Anderson, 2004). Data from each instrument type should be stored in NWIS using parameter codes and measurement reporting units that are specific to the technology and the instrument (see *Data Reporting*). Turbidity meters should be calibrated directly rather than by comparison with another meter.

Most commercially available sensors report data in nephelometric turbidity units (NTU), with a sensor range of 0–1,000 and an accuracy of $\pm$5 percent or 2 NTU, whichever is greater. Some sensors can report values reliably up to about 1,500 NTU. The USGS, however, defines NTU specific to the measurement of light scatter from a white tungsten lamp with color temperature 2,200–3,000 degrees Kelvin and a light detector at 90 ($\pm$30) degrees from incident light (Anderson, 2004). Instruments with such nephelometric designs qualify for approved measurement of turbidity in drinking water by the U.S. Environmental Protection Agency (USEPA) Method 180.1 (U.S. Environmental Protection Agency, 1993). Another USEPA-approved method (GLI Method 2) for measuring the turbidity of finished drinking water is a dual-beam and dual-detector technology that compensates for color and reduces

erratic readings (U.S. Environmental Protection Agency, 1999). Field turbidity meters that are based on USEPA Method
180.1 technology will not produce the same sensor response to a 100-NTU calibrant as a submersible turbidity sensor that is based on International Standards Organization (ISO) 7027 (International Organization for Standardization, 1999)
technology. Turbidity sensors for most submersible continuous water-quality sondes are based on nephelometric near-infrared wavelength technology that is compliant with ISO 7027,
and data should be reported in formazin nephelometric units (FNU) as described by Anderson (2004).

Instrument Acceptance Criteria

Independent testing to ensure accuracy and reliability is an important part of any quality-assurance program for hydro- logic field instrumentation. One of the primary responsibilities of the USGS Hydrologic Instrumentation Facility (HIF) is
the testing, evaluation, and documentation of instrument performance. USGS Water Science Centers are encouraged to purchase or rent instruments through the HIF when possible. Otherwise, programs or projects are required to perform the necessary steps of independent testing to ensure accuracy
and reliability as stated by the instrument manufacturer (U.S. Geological Survey, 1995). Water Science Center personnel are encouraged to work with the HIF to evaluate new instrumenta- tion and actively participate by entering, reviewing, and overseeing data in the Web-based instrument quality-assurance database, managed by the HIF (*http://1stop.usgs.gov/qa/*), and by taking corrective actions when necessary.

Placement of Sensors in the Aquatic Environment

Placement of a water-quality monitoring sensor is dependent on the purpose of monitoring and the data-quality objectives. The data-quality objectives for the measurement of loads or flux in a stream or river generally require place- ment of a water-quality monitoring sensor at a location that is representative of conditions in the stream cross section.
Some environments, such as lakes, estuaries, or poorly mixed streams, preclude sensor placement at one representative point, and alternative monitoring strategies must be considered.
For example, multiple sensors can be located in vertically or horizontally stratified aquatic environments. Another option is the use of a flow-through monitor configuration (see *Monitor Configurations and Sensors*) with intakes located at multiple depths or horizontal locations. Alternatively, if poor mixing occurs only during particular seasons or flow conditions, sensors can be placed at the optimal location, and the rating of the accuracy of the record (see *Publication Criteria*) can
be downgraded during periods of poor mixing. In all cases, it is necessary to characterize the vertical and horizontal mixing at the monitor site with measurement surveys of vertical and horizontal cross-section variability (see *Stream Cross-Section Surveys*).